This is a free page sample. Access the full version online.

National Standards Authority of Ireland

IRISH STANDARD

I.S. EN 15242:2007

ICS 91.140.30
n

VENTILATION FOR BUILDINGS - CALCULATION METHODS FOR THE DETERMINATION OF AIR FLOW RATES IN BUILDINGS INCLUDING INFILTRATION

National Standards
Authority of Ireland
Glasnevin, Dublin 9
Ireland
Tel: +353 1 807 3800
Fax: +353 1 807 3838
http://www.nsai.ie

Sales
http://www.standards.ie

This Irish Standard was published under the authority of the National Standards Authority of Ireland and comes into effect on:
7 June 2007

NO COPYING WITHOUT NSAI PERMISSION EXCEPT AS PERMITTED BY COPYRIGHT LAW

© **NSAI 2007**

Price Code P

Údarás um Chaighdeáin Náisiúnta na hÉireann

This is a free page sample. Access the full version online.

This is a free page sample. Access the full version online.

EUROPEAN STANDARD

NORME EUROPÉENNE

EUROPÄISCHE NORM

EN 15242

May 2007

ICS 91.140.30

English Version

Ventilation for buildings - Calculation methods for the determination of air flow rates in buildings including infiltration

Ventilation des bâtiments - Méthodes de calcul pour la détermination des débits d'air y compris les infiltrations dans les bâtiments

Lüftung von Gebäuden - Berechnungsverfahren zur Bestimmung der Luftvolumenströme in Gebäuden einschließlich Infiltration

This European Standard was approved by CEN on 26 March 2007.

CEN members are bound to comply with the CEN/CENELEC Internal Regulations which stipulate the conditions for giving this European Standard the status of a national standard without any alteration. Up-to-date lists and bibliographical references concerning such national standards may be obtained on application to the CEN Management Centre or to any CEN member.

This European Standard exists in three official versions (English, French, German). A version in any other language made by translation under the responsibility of a CEN member into its own language and notified to the CEN Management Centre has the same status as the official versions.

CEN members are the national standards bodies of Austria, Belgium, Bulgaria, Cyprus, Czech Republic, Denmark, Estonia, Finland, France, Germany, Greece, Hungary, Iceland, Ireland, Italy, Latvia, Lithuania, Luxembourg, Malta, Netherlands, Norway, Poland, Portugal, Romania, Slovakia, Slovenia, Spain, Sweden, Switzerland and United Kingdom.

EUROPEAN COMMITTEE FOR STANDARDIZATION
COMITÉ EUROPÉEN DE NORMALISATION
EUROPÄISCHES KOMITEE FÜR NORMUNG

Management Centre: rue de Stassart, 36 B-1050 Brussels

© 2007 CEN All rights of exploitation in any form and by any means reserved worldwide for CEN national Members.

Ref. No. EN 15242:2007: E

This is a free page sample. Access the full version online.

Contents

Page

Foreword ... 3
Introduction ... 4
1 Scope ... 6
2 Normative references ... 6
3 Terms and definitions ... 7
4 Symbols and abbreviations ... 9
5 General approach ... 10
6 Instantaneous calculation (iterative method) ... 12
6.1 Basis of the calculation method ... 12
6.2 Mechanical air flow calculation ... 13
6.3 Passive and hybrid duct ventilation ... 17
6.4 Combustion air flows ... 23
6.5 Air flow due to windows opening ... 25
6.6 Exfiltration and infiltration using iterative method ... 27
6.7 Exflitration and infiltration calculation using direct method ... 28
7 Applications ... 30
7.1 General ... 30
7.2 Energy ... 30
7.3 Heating load ... 35
7.4 Cooling loads ... 35
7.5 Summer comfort ... 35
7.6 Indoor air quality ... 36
Annex A (normative) **Data on wind pressure coefficients** ... 37
Annex B (normative) **Leakages characteristics** ... 43
Annex C (normative) **Calculation of recirculation coefficient C_{rec}** ... 46
Annex D (normative) **Conversion formulas** ... 48
Annex E (informative) **Examples of fuel flow factor for residential buildings** ... 51
Bibliography ... 52

This is a free page sample. Access the full version online.

Foreword

This document (EN 15242:2007) has been prepared by Technical Committee CEN/TC 156 “Ventilation for buildings”, the secretariat of which is held by BSI.

This European Standard shall be given the status of a national standard, either by publication of an identical text or by endorsement, at the latest by November 2007, and conflicting national standards shall be withdrawn at the latest by November 2007.

This standard has been prepared under a mandate given to CEN by the European Commission and the European Free Trade Association (Mandate M/343), and supports essential requirements of EU Directive 2002/91/EC on the energy performance of buildings (EPBD). It forms part of a series of standards aimed at European harmonisation of the methodology for the calculation of the energy performance of buildings. An overview of the whole set of standards is given in CEN/TR 15615, Explanation of the general relationship between various CEN standards and the Energy Performance of Buildings Directive (EPBD) ("Umbrella document").

Attention is drawn to the need for observance of relevant EU Directives transposed into national legal requirements. Existing national regulations with or without reference to national standards, may restrict for the time being the implementation of the European Standards mentioned in this report.

According to the CEN/CENELEC Internal Regulations, the national standards organizations of the following countries are bound to implement this European Standard: Austria, Belgium, Bulgaria, Cyprus, Czech Republic, Denmark, Estonia, Finland, France, Germany, Greece, Hungary, Iceland, Ireland, Italy, Latvia, Lithuania, Luxembourg, Malta, Netherlands, Norway, Poland, Portugal, Romania, Slovakia, Slovenia, Spain, Sweden, Switzerland and United Kingdom.

This is a free page sample. Access the full version online.

Introduction

This standard defines the way to calculate the airflows due to the ventilation system and infiltration. The relationships with some other standards are as follows:

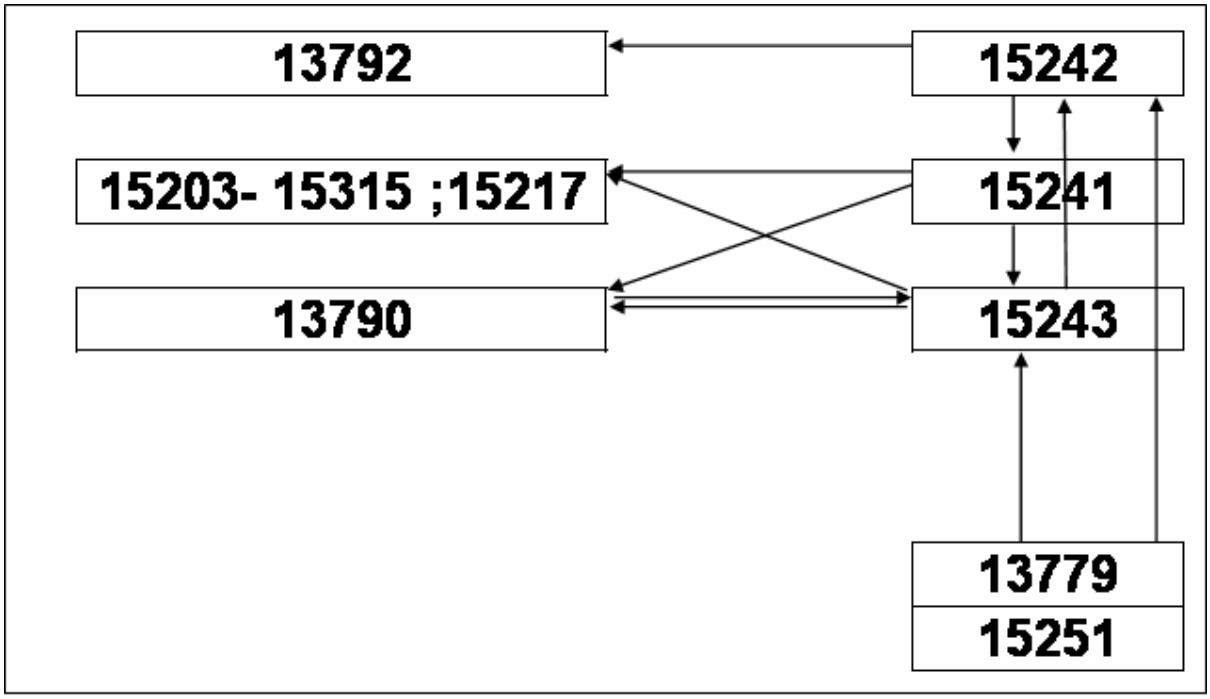

Figure 1 — scheme of relationship between standards

Table 1 — Relationship between standards

from	To	Information transferred	variables
15251	15243	Indoor climate requirements	Heating and cooling Set points
13779 15251	15242	Airflow requirement for comfort and health	Required supply and exhaust Air flows
15242	15241	Air flows	Air flows entering and leaving the building
15241	13792	Air flows	Air flow for summer comfort calculation
15241	15203- 15315 ;15217	energy	Energies per energy carrier for ventilation (fans, humidifying, precooling, pre heating), + heating and cooling for air systems
15241	13790	data for heating and cooling calculation	Temperatures, humilities and flows of air entering the building

SAI GLOBAL

This is a free preview. Purchase the entire publication at the link below:

Product Page

Looking for additional Standards? Visit Intertek Inform Infostore

Learn about LexConnect, All Jurisdictions, Standards referenced in Australian legislation